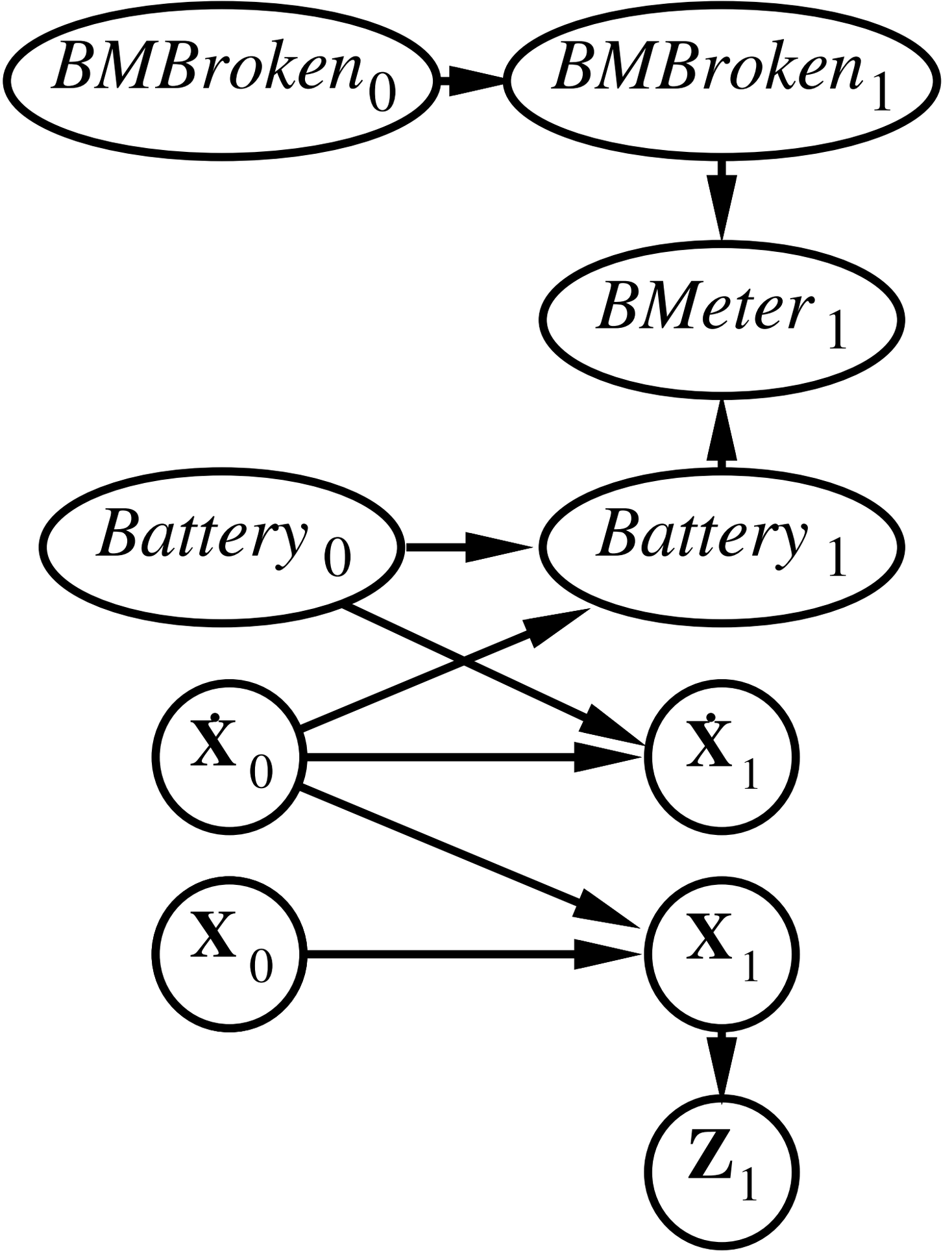
$BMBroken_0$
$BMBroken_1$
$BMeter_1$
$Battery_0$
$Battery_1$
$\dot{\mathbf{X}}_0$
$\dot{\mathbf{X}}_1$
$\mathbf{X}_0$
$\mathbf{X}_1$
$\mathbf{Z}_1$